TECH-ROLL
Low Headroom (LHR)

Installation and Maintenance Manual

259 ch d'Alençon, Boucherville, QC, Canada, J4B 0G9
Tél: (450) 641-8222, 1-866-835-8324, info@indotech.ca

April 2023

TABLE OF CONTENTS

Introduction

Carefully read this manual before starting the installation of your TECH ROLL ULTRA LOW HEADROOM door.

Installing a TECH ROLL door is a considerable task that requires knowledge and preparation. We recommend you contact a professional specialized in the field. Not only will the door will be adjusted properly, the professionals will guarantee its installation in accordance with their warranty terms.

The installation instructions that follow are general guidelines. Under no circumstances should it be considered as complete instructions for the installation of a roll-up industrial door. **The manufacturer assumes no responsibility for any damages incurred during the installation of a TECH ROLL door.**

The door must be properly installed in order to provide reliable, safe and long term usage. If you have any doubts or questions concerning the installation, please contact us at 1-866-835-TECH.

How to use this manual

Throughout this manual, the following images are used to alert the reader to potential hazardous situations. Additional information is also provided to ensure proper manipulation or installation of the door.

WARNING

WARNING is used to indicate the potential for personal injury if the procedure is not performed as described.

CAUTION

CAUTION is used to indicate the potential for damage to the product or property if ever the procedure is not done correctly. It is also used to relay CRITICAL information to the reader in order to finish successfully the task at hand.

The mention "*Note*" is used to provide additional information to help in the completion of the procedure, or in the operation of the door, and is not usually safety related.

Tools and equipment required

1- Socket and wrench set

2- High capacity forklift

3- Stepladder or ladder

4- Carpenter, spirit, water or laser level

5- Welder

6- Rubber mallet

7- Various hand tools (pliers,

screwdrivers, two spring winding bars.)

8- “C” Clamps (at least 4)

9- Measuring tape

Basic job requirements

1- The customer, dealer or installer must supply a high capacity forklift.

2- A minimum of two people are required.

3- The customer must guarantee full access to the door opening during the installation. No traffic should be allowed through the door during the installation.

Note: One installer must be a qualified electrician and all electrical work must meet local building codes. If the installer is not qualified, an electrician must be present to install the components that require power such as the control panel.

4- The Indotech control panel should be installed next to the door.

Electrical requirements

A qualified electrician will have to:

1- Install the Indotech wall-mount control panel (if any),

2- Supply and install a fusible disconnect box,

3- Run the power wires from the main distribution panel to a fusible disconnect box then to the Indotech control panel or motor control box,

4- Run wires from all the components of the door (limit switches, sensors) to the Indotech control panel or motor control box.

General layout of the door

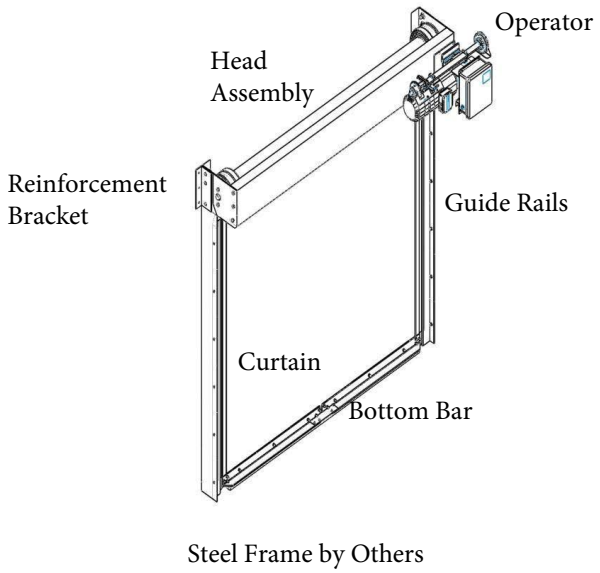

Figure 1

Installation

Measuring the door opening

1- It is very important to check the measurements of the door opening with the received door. **If the measurements do not match, do not install the door.**

2- It is important to check the squaring of the steel frame. This can be checked using a carpenter's water level or a laser level (See Figure 2).

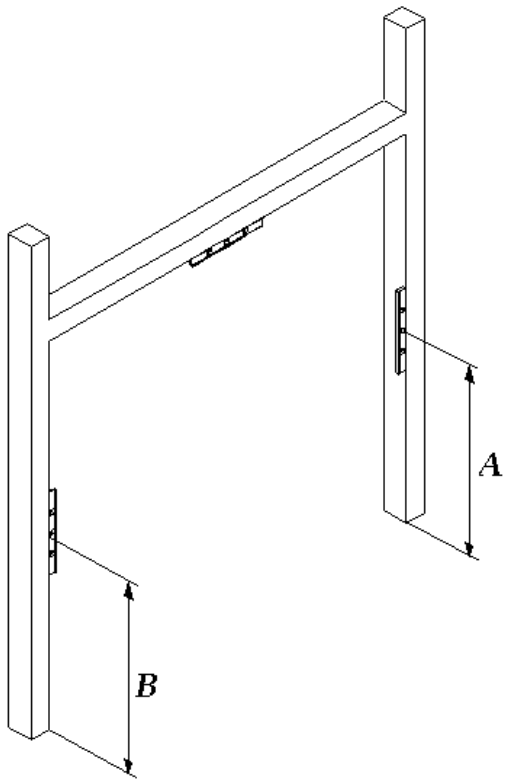

Figure 2

If a laser is used, the distance between the laser mark and the floor, measure A and B (See Figure 2), must be equal to ±1/8-in. If the difference between the two distances is greater than the allowable tolerance, the use of shims or another method of adjustment to ensure the ±1/8-in tolerance is possible. If a water level is used, the distance between the watermark and the floor, measure A and B (See Figure 2), must be equal ±1/8-in. If the difference between the two distances is greater than the tolerance, then use shims other method to ensure the ±1/8-in tolerance.

3- Ensure the steel frame is straight vertically in the area where the guide rail will be mounted (See Figure 3). If the area is not straight vertically or is not perpendicular with the floor, use shims or other methods of levelling.

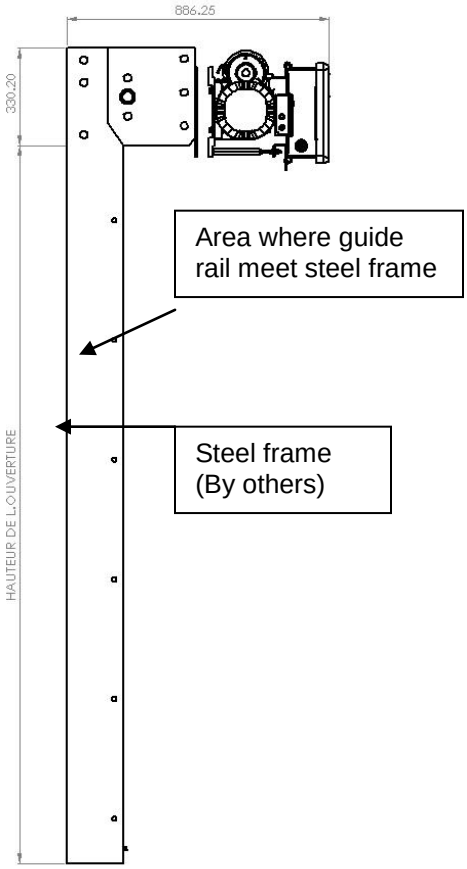

Figure 3

Measuring the head assembly

Before installing the guide rail, it is necessary to know the distance the rails need to be apart for the door to operate correctly.

This distance is obtained by measuring the head assembly.

The "C" dimension should be taken from side plate to side plate at the front of the head assembly as shown on Figure 4.

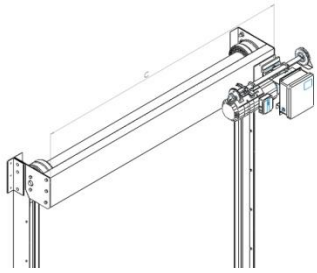

Figure 4

CAUTION

The measure 'C', from the head assembly, must be taken at the ends of the front cross-member shown in Figure 4. <u>The measure taken from Figure 5 is incorrect</u>. The space between the steel plates varies during shipping or handling and it should not be used.

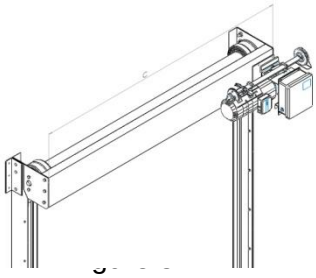

Installing the guide rails

1- Install the guide rails on the steel frame using "C" clamps.

2- Using a level, check if the guide rails are straight vertical and parallel to each other.

The inside distance between the rails must be the same from the top to bottom (See Figures 6 and 7).

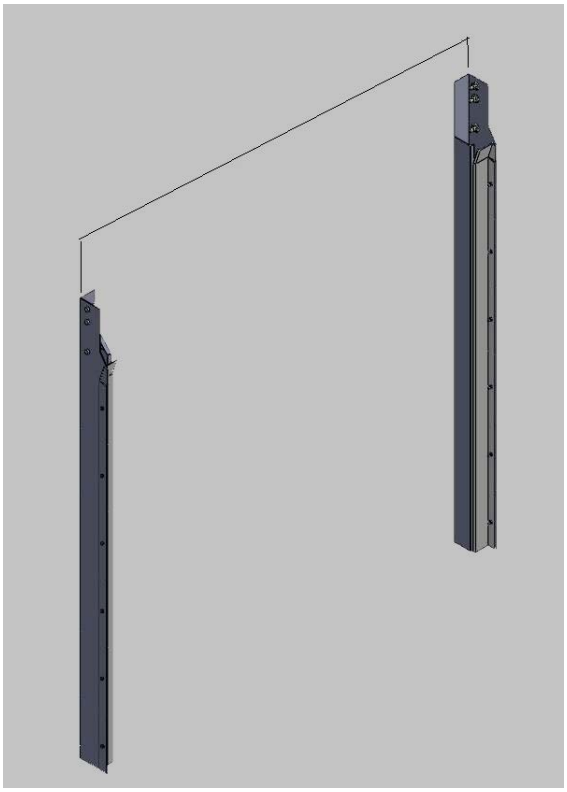

Figure 6

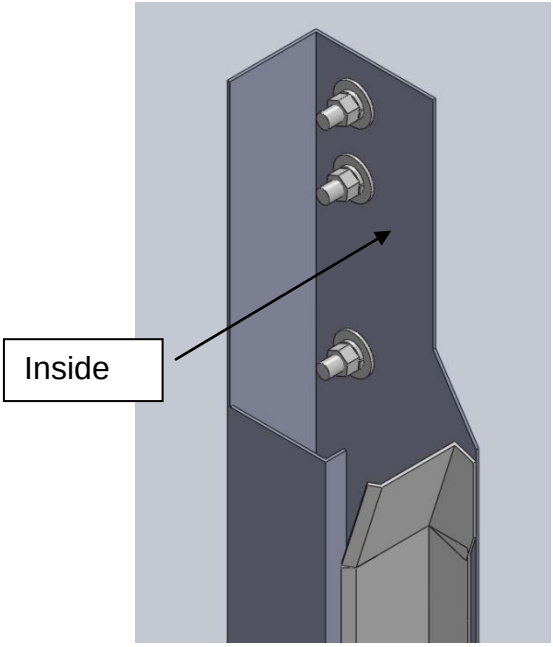

Figure 7

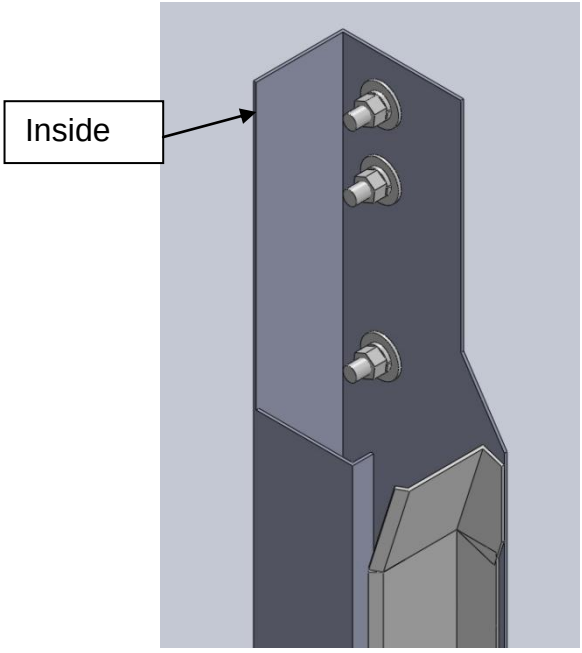

Figure 8

CAUTION

The (inside) space between the rails must be measured as in Figure 7. It must not be done as in Figure 8. If the measurement is not taken properly the door will not function as required.

3- Weld the rails to the steel frame (See Figure 9 and 10).

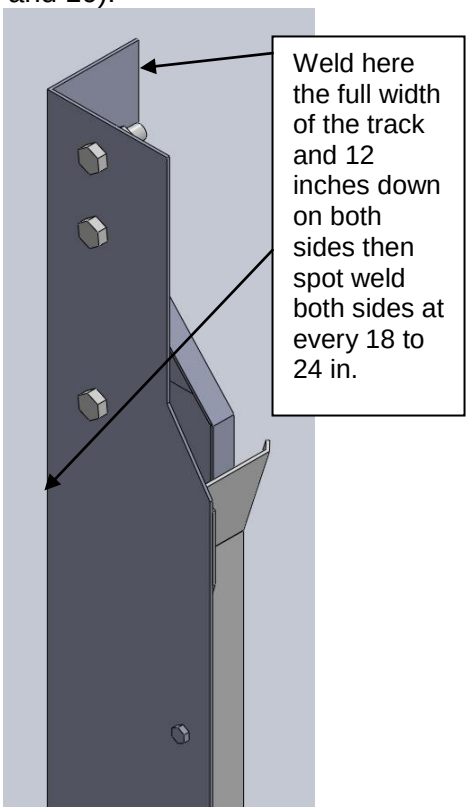

Figure 9

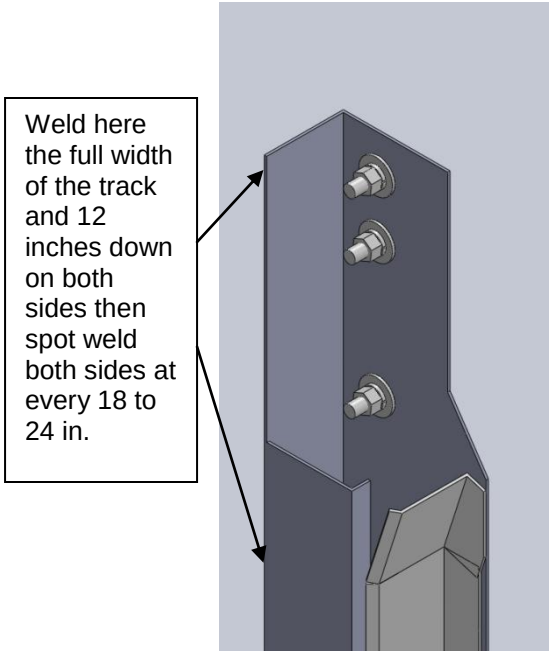

Figure 10

Installing the head assembly

1- Use the forklift to align the head assembly between the guide rails and fasten it with 1/2-13 bolts supplied with the door (See Figure 11).

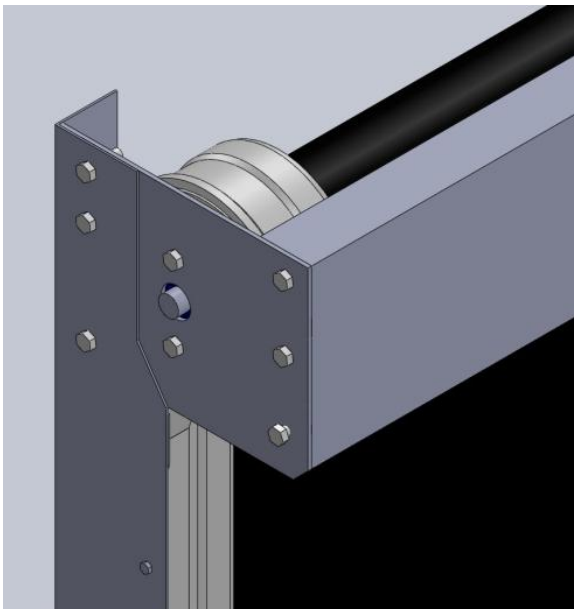

Figure 11

CAUTION

The plate from the head assembly must be fastened inside the guide rails for the door to operate correctly.

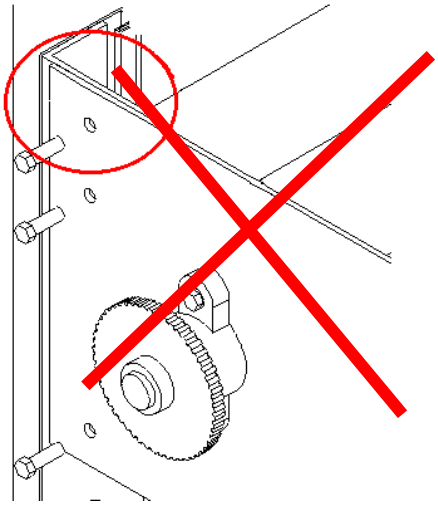

Figure 12

2- Check if the main roller is centered within the head assembly (See Figure 13 on the next page).

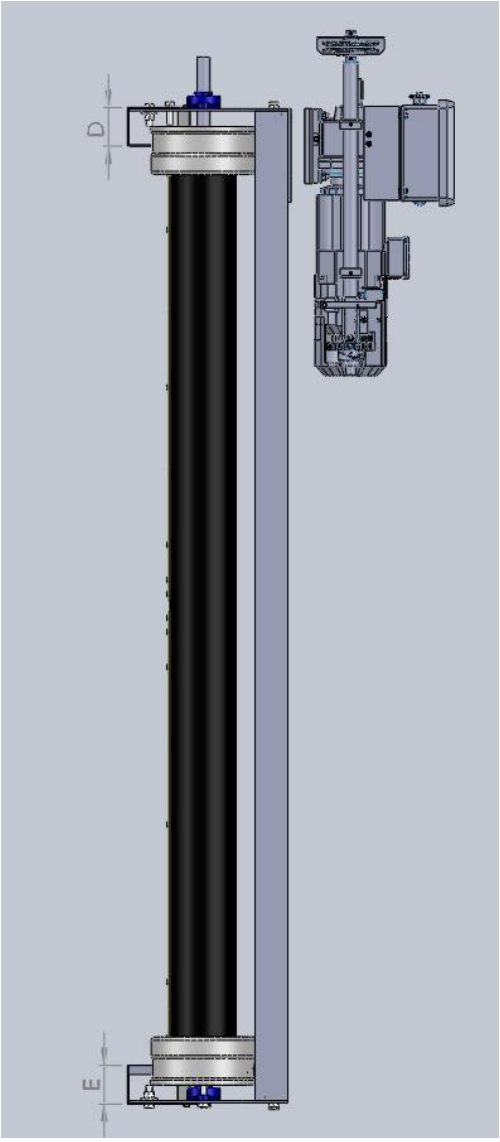

Figure 13

Dimensions D and E must be the same.

WARNING

After the installation of the head assembly, and adjustment of the main roller, makes sure the setscrews on the bearings are tightened properly (See Figure 14). Injury may occur if the main roller slips out of the bearings while the door is in operation.

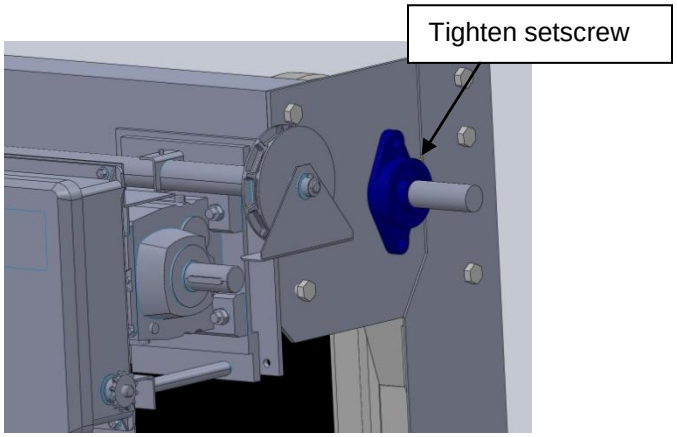

Figure 14

Inserting the curtain into the guide rails

Untie the curtain and slide it into the guide rails about 12 inches. The end lock must slide into its channel between the PVC mouldings (See Figure 15).

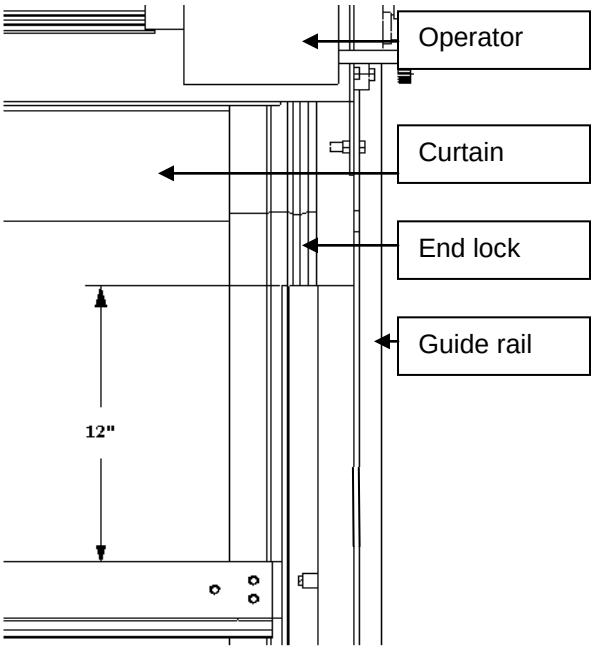

Figure 15

Roller Chain Installation

1- Using the #40 or #50 sized chain, join the clutch drive sprocket and...

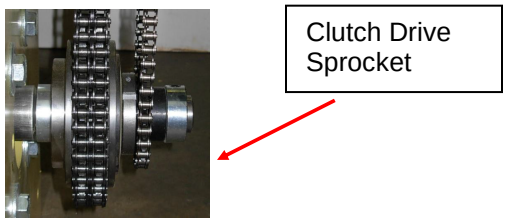

Picture 1

...the door sprocket together with the chain link supplied in the hardware bag located in the hardware box. If the chain is too long, punch out the pin, that will leave an inside link nearest to the desired length.

2- Check for chain slack from both sprockets, (there should be no more than ¼-in of slack between sprockets when chain is depressed)

Always tighten the setscrews

Hand Chain Installation

1- Run hand chain through the pocket wheel and chain guide, allow both ends to hang down toward the ground and cut excess of hand chain if necessary, so both ends are approximately 4 feet from the ground. Connect both ends of hand chain.

For more information - refer to operator's installation and instruction manual.

Clutch

Run door down with the chain hoist, if clutch slips, here how to adjust it:

1- Loosen the clutch nut setscrew by a 1/4 turn max (**do not remove setscrews**).

2- Tighten the clutch nut gradually until there is just enough pressure on the Belleville spring washer to permit chain hoist to move door smoothly, but will allow clutch to slip if the door is obstructed.

3- When the clutch is properly adjusted, it should be possible to stop the door by hand during travel, when using the opener or the chain hoist.

4- Make sure to tighten the clutch setscrew each time the clutch is tested for adjustments and that it is locked in place on completion of adjustments.

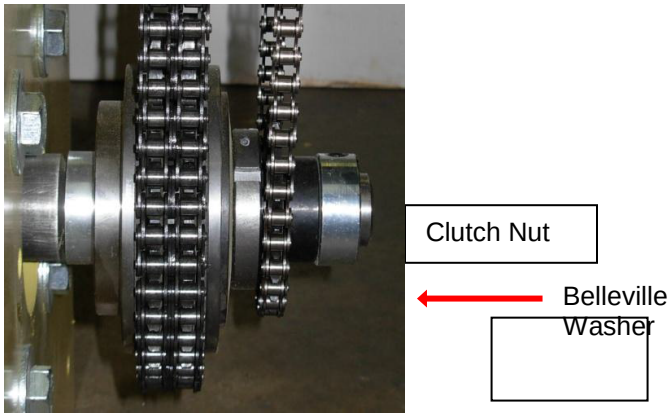

Picture 2

Installing the brush weather strip

The brush weather strip is installed onto the horizontal (top) part of the steel frame of the opening with the bristles pointing towards the curtain. You should not see the light between the bristles and the back of the curtain when looking at it from the ground up. (See Picture 3).

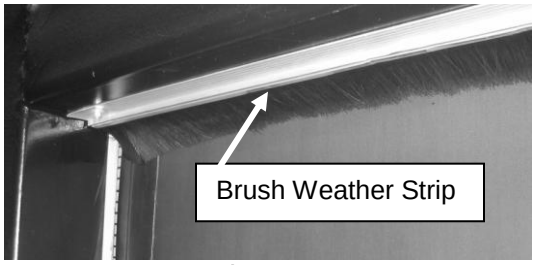

Picture 3

Inspecting the components

Before putting the door in operation, you need to check if the major components of the door are working well. This step is done by hand, using the chain hoist.

Check if:

1- The curtain slides freely and evenly inside the guide rails,

2- The bottom bar makes full contact with the ground and there is no light showing,

3- The springs are tightened enough to operate the door correctly when it travels manually.

When the mechanical adjustments are completed, **return the door to the half-open position**.

Door start-up

Before testing the electrical components, the door must be in the half-open position.

Once all the electrical components are connected, the following tests are required.

1- Check for the proper rotation of the opener/door, example: If by pressing the open button the door closes, the rotation is wrong, reverse rotation by reversing 2 phases of the incoming lines to the opener.

2- Readjust the cams if the door is not stopping properly at its fully open or close positions.
See Figure 18 or refer to operator's installation and instruction manual.

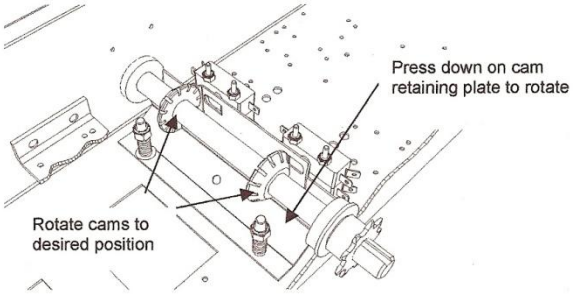

Figure 18

3- Verify that the safety edge is operational: Place an object, high enough to clear a foot off the ground and close the door. The door should reverse back up after hitting the object. If not, look for a faulty switch or faulty wiring.

4- Verify if the photocell is operational: Using a long object block the photocell beam, while the door is coming down. The door should reverse back up automatically. If not, look for a faulty photocell and/or wiring.
NOTE: **if the photocell is not energized, aligned correctly or defective, or if the wiring is faulty, it will prevent the door from closing.**

General repair guide

Inertia brake reset (if equipped)

Once the inertia brake is activated it is no longer possible to operate the door mechanically It is then necessary to reset the brake manually. To do so, using the chain hoist lift the door one to two feet. Then press the “Open” button to open completely the door. Press the “Close” button. The door should be functional and the inertia brake should be reset.

Replacing side plates

1- Pull out part of the bottom of the curtain from the track.

2- Unbolt the bolts situated at the extremities of the bottom bar.

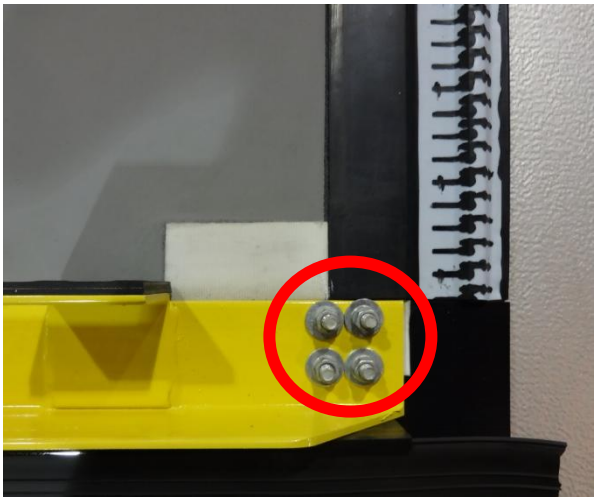

3- Slide out the side plate

4- Using the old side plates as a template. Pre-drill the new holes in the new side plate.

5-Install the new side plates on the door.

6- Replace the door in the track.

The same operation applies to replacing the side plate on the other side.

Troubleshooting

1. The door opens but does not close smoothly or jerks.	1. The guide rails were installed inside the head unit.	1. Re-install the guide rails outside the head unit.
	1.1 The clutch is worn out or needs adjustment.	1.1 Adjust the clutch or replace the part(s) that are worn out.
2. The door closes quickly but is hard to open.	2. The clutch is worn out or needs adjustment.	2. Adjust the clutch or replace the part(s) that are worn out.
3. The door re-opens by itself.	3. Under the effect of wind the door may move and block the infrared beam.	3. Adjust the bottom bar stiffener of the door.
		3.1 Check the opening of the guide rails and adjust the tension of the spring mounted on the guide rail if necessary.
		3.2 Move the infrared sensor.
4. The door is slow to operate.	4. The clutch is worn out or needs adjustment.	4. Adjust the clutch or replace the worn out parts.
5. The door won't open with the chain hoist.	5. The clutch is worn out or needs adjustment.	5. Adjust the clutch or replace the worn out parts.
6. The opener runs but the door won't move.	6. The brake motor is engaged.	6. Disengage the brake motor and check the wiring of the brake motor.
	6.1 The clutch needs adjustment.	6.1 Adjust the clutch.
7. The door curtain won't stop while going up or down.	7. The chain drive is broken or missing.	7. Replace or repair the drive chain.
	7.1 Check for missing key ways of the drive system.	7.1 Put new key ways where necessary.
	7.2 Check limit switch system.	7.2 Adjust or replace parts of the limit switch.
8. The curtain rolls up at an angle	8. The main roller is not perpendicular with the head of the curtain.	8. Adjust the curtain on the main roller using rubber shims between the curtain and the main pipe.
		8.1 Re-center the main roller between the two head plates.

9. Curtain slides easily out of the guide rails.	9. Check for wear on the PVC mouldings.	9. Replace the PVC moulding.

For electrical troubleshooting, refer to opener's maintenance manual

INDOTECH

Industrial Rapid Door Manufacture

MAINTENANCE GUIDE FOR TECH-ROLL DOORS

COMPANY NAME:_____**PROJECT:**_____

TECHNICIAN:_____**DATE:**_____

SERIAL NUMBER: _____ **DOOR NO:**_____

NUMBER of CYCLES:_____

Maintain every 3 months or reaching

Always turn off the power before any maintenance!

Cycles	25,000	50,000	75,000	100,000		
Replace electric operator fasteners every year. .						
Check speed reducer for oil leaks.	☐	☐	☐	☐	☐	☐
Check clutch pads for wear and correct pressure.	☐	☐	☐	☐	☐	☐
Lube all chains.	☐	☐	☐	☐	☐	☐
Check for slack on all roller chains.	☐	☐	☐	☐	☐	☐
Replace driving roller chain every 6 months or	☐	☐	☐	☐	☐	☐
Check sprocket alignment.	☐	☐	☐	☐	☐	☐
Tighten setscrews on all sprockets and bearings.	☐	☐	☐	☐	☐	☐
Check limit switches for damage.	☐	☐	☐	☐	☐	☐
Lube limit shaft.	☐	☐	☐	☐	☐	☐
Check control panel for damage or wear.	☐	☐	☐	☐	☐	☐
Tighten all electrical terminals (make sure power is off!).	☐	☐	☐	☐	☐	☐
Check rail guide PVC strips for wear.	☐	☐	☐	☐	☐	☐
Check curtain for wear or tear.	☐	☐	☐	☐	☐	☐

Check curtain end lock for wear or tear.	☐	☐	☐	☐	☐	☐
Check guide rail gaps of curtain with a new PVC strips (approx. 5/16”).	☐	☐	☐	☐	☐	☐
Check for any missing nuts, bolts or small springs.	☐	☐	☐	☐	☐	☐
Check bottom bar corner brackets for wear.	☐	☐	☐	☐	☐	☐
Check electric operator mounting bolts for wear and looseness.	☐	☐	☐	☐	☐	☐
Check door clutch for wear or adjustments.	☐	☐	☐	☐	☐	☐
Grease carriage and or replace as needed.	☐	☐	☐	☐	☐	☐
Turn power back on.						
Check all safety devices for correct operation (soft touch, photo-cell, E-stop…).	☐	☐	☐	☐	☐	☐
Check if chain hoist switch cuts power when activated.	☐	☐	☐	☐	☐	☐
Open/Close/Stop buttons work properly.	☐	☐	☐	☐	☐	☐
Check limit switches adjustments.	☐	☐	☐	☐	☐	☐
	☐	☐	☐	☐	☐	☐
	☐	☐	☐	☐	☐	☐

Signature: _____

Date:_____

For any other problems contact Indotech at: 1-866-835-8324.